PLP1402-1.1

HIGH EFFICIENCY TOILET FLUSH VALVE
(1.1 gpf / 4.2 Lpf per flush)

Pulsar Plus

Description

Battery powered, sensor activated, diaphragm operated, chrome plated exposed flush valve for 1-1/2" floor mounted or wall hungtop spud water closet.

Flush Cycle

1.1 gpf / 4.2 Lpf High Efficiency

Specification

- SmartChoice Technology software provides field adjustability for True-in-the-Field Water Conservation
- Mashaerator self-cleaning diaphragm
- 6 Volt DC non-latching solenoid valve
- 6 Volt DC litium batter (2CR5 type)
- Infrared sensor with Dual Infrared Transmitter Technology
- Field adjustable range
- Chloramine resistant diaphragm.
- Arming delay of 10 seconds prevents unintentional flushes
- Elecrtronic courtesy flush push button.
- Renewable main valve seat.
- 1" vandle resistant capped screwdriver angle stop with back-check.
- Sweat Adapter Kit
- Vacuum Breaker w/ 9" flush connection.
- Wall flange, spud nut and spud flange for 0.75" top spud.
- All rubber parts molded of chloramine resistant rubber.

Variations

- ☐ GJ - Ground Jount Tailpiece
- ☐ SC - SlipFit Connection (adjustable joint tailpiece)
- ☐ G - Bumper on angle stop (for seat without cover)
- ☐ T6 - Wall flange with allen set screw.
- ☐ T36 - Solid ring wall support for flush connection
- ☐ T46 - Split ring wall support for flush connection
- ☐ TS - TruStop - Ball valve designed Control Stop
- ☐ VPS - Vandal Proof Control Stop with Key

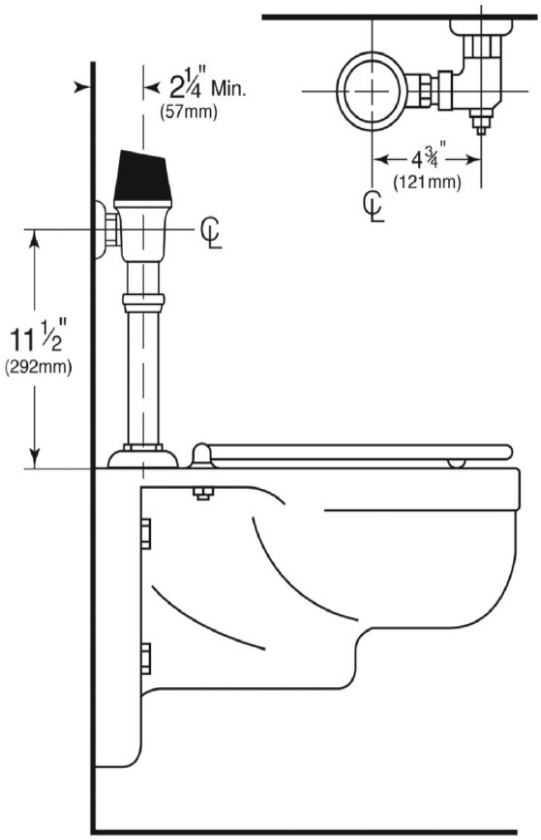

Note: Min.roughing height 10 1/2" centerline of supplu to top of fixture.

P.O. Box 411 • Charlottesville • VA • 22902 • USA Phone: (434) 296-0166 • Fax (434) 977-3596
Email: info@delanyproducts.com Web: www.delanyproducts.com ©2016 v1