TruStop

with TruChek

Simplicity in Design



THE PROBLEM

Control stops in flush valves will fail over time. With traditional flush valves, replacing the control stop requires turning off the water to the bathroom, a hall or floor, sometimes the entire building. **This is not just inconvenient, it's costly.**

> **"Fixing a control stop can be very challenging in these old buildings. We often have to shut down the water to a riser line, affecting multiple floors. This requires the work to be done at night or on weekends. Sometimes we have to call in DOE plumbers which makes what should be a simple fix into very expensive and time consuming project."**
>
> — NYC SCHOOL BUILDING ENGINEER

THE SOLUTION

The patented Delany TruStop with TruChek uses a ball valve design, that for the first time, allows you to fix a failed back check without ever leaving the restroom.

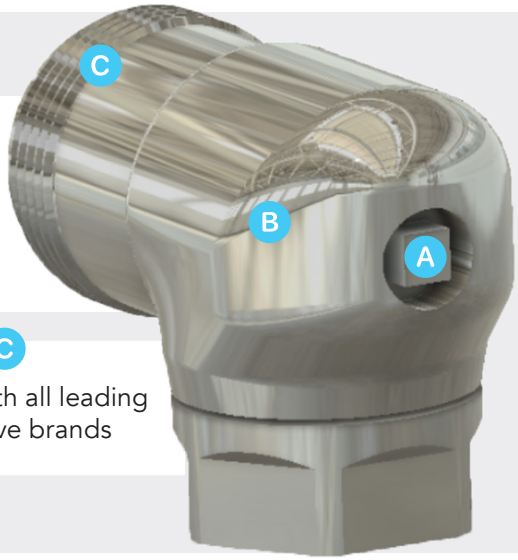

A — Vandal proof and a simple ¼ turn for shutoff

B — Ball valve design that will last for decades

C — Retrofits with all leading flush valve brands

Delany Since 1879 Products™

P.O. Box 411, Charlottesville, VA 22902 | 434-296-0166 | delanyproducts.com



TruStop with TruChek

SAVES TIME AND MONEY

This patented breakthrough in commercial flush valve technology ends the need for costly after hours repairs. One person can do the job in minutes — not hours.

BENEFITS:

- No need to shut off water to the entire restroom or worse
- Turn water off at the source for easy and fast replacement of the TruChek
- Designed to fit any manufacturers valve
- Longer life means less frequent maintenance
- No need for HEPA containment tents in hospitals
- Vandal Proof

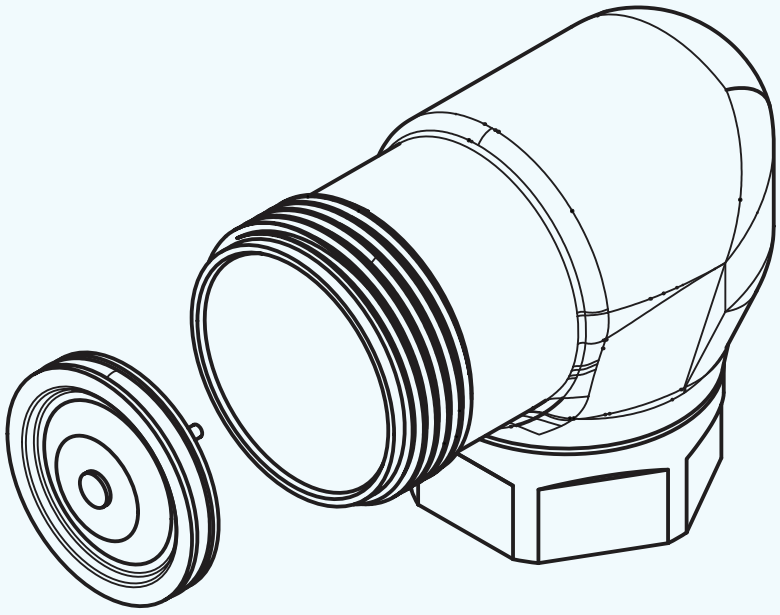

PART NUMBERS
1010A - 1” supply line (WCs)
1020A - ¾” supply line (urinals)
1015A - TruCheck

Delany Since 1879 Products™

P.O. Box 411, Charlottesville, VA 22902 | 434-296-0166 | delanyproducts.com